Portapunzoni innesto rapido serie Standard *Ball lock retainers - Standard series*



Codice/*Code*

Cod. **CR_**

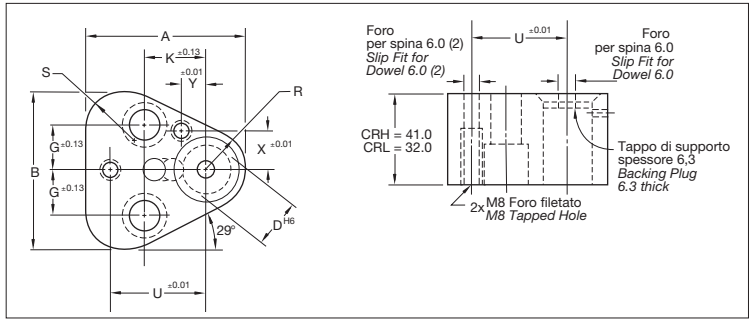

PER APPLICAZIONI PESANTI / *HEAVY DUTY*											
CODICE *CODE*	**D**	**A**	**B**	**G**	**K**	**R**	**S**	**U**	**X**	**Y**	**VITI *SIZE***
CRH 10	10.0	44.5	43.7	11.1	19.0	9.5	12.0	26.925	9.0	7.5	M8
CRH 13	13.0	50.8	50.0	14.3	19.0	12.7	15.2	29.970	12.0	6.5	M8
CRH 16	16.0	54.0	53.2	15.9	19.0	14.3	16.8	31.750	13.5	6.0	M8
CRH 20	20.0	60.3	59.5	17.5	19.0	17.5	20.0	33.530	16.5	5.0	M10
CRH 25	25.0	69.9	69.1	19.8	23.8	22.2	24.7	40.640	22.0	7.0	M12
CRH 32	32.0	69.1	69.1	19.8	23.8	22.2	24.7	40.640	22.0	7.0	M12
CRH 40	40.0	77.4	76.6	24.0	27.0	26.0	28.5	43.993	26.0	10.0	M12

PER APPLICAZIONI LEGGERE / Light duty											
CODICE *CODE*	**D**	**A**	**B**	**G**	**K**	**R**	**S**	**U**	**X**	**Y**	**VITI *SIZE***
CRL 10	10.0	44.5	43.7	11.1	19.0	9.5	12.0	26.925	9.0	7.5	M8
CRL 13	13.0	50.8	50.0	14.3	19.0	12.7	15.2	29.970	12.0	6.5	M8
CRL 16	16.0	54.0	53.2	15.9	19.0	14.3	16.8	31.750	13.5	6.0	M8
CRL 20	20.0	60.3	59.5	17.5	19.0	17.5	20.0	33.530	16.5	5.0	M10
CRL 25	25.0	69.9	69.1	19.8	23.8	22.2	24.7	40.640	22.0	7.0	M12
CRL 32	32.0	69.1	69.1	19.8	23.8	22.2	24.7	40.640	22.0	7.0	M12
CRL 38	38.0	77.4	76.6	24.0	27.0	26.0	28.5	43.993	26.0	10.0	M12

Esempio di ordinazione/*Order example*: CRH 10 (codice/*code*)

Per accessori e piastrine di spessoramento vedi pagg. 3.49-3.50
For accessories and backing plates see pages 3.49-3.50

Via Alba, 25 - 10024 Moncalieri (TO) - Italy
Tel. +39 011641121 - Fax +39 0116829188
cftorino@cftorino.it www.cftorino.it

CF TORINO