Portapunzoni innesto rapido serie Standard *Ball lock retainers True Set Standard*

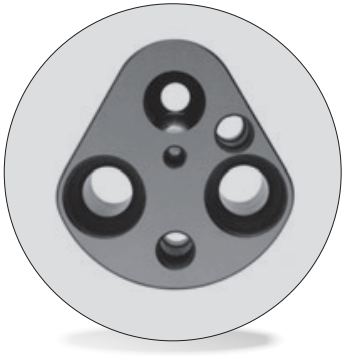

Codice/*Code*
Cod. **MR_**

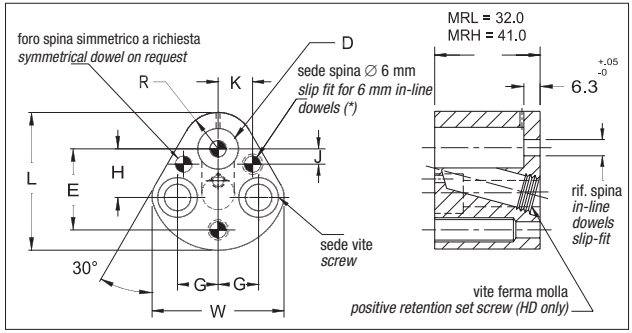

Per accessori e piastrine di spessoramento vedi pagg. 3.49-3.50
For accessories and backing plates see pages 3.49-3.50

PER APPLICAZIONI PESANTI / Heavy duty

CODICE/*CODE*	D	E ± .01	G	L	W	R	H	J ± .01	K ± .01	Ø SPINA/*DOWEL*	VITE/*SCREW*
MRH-10	10	26.924	11.12	44.5	39.9	9.5	19.05	7.50	9.00	6	M8
MRH-13	13	29.972	14.27	50.8	48.3	12.7	19.05	6.50	12.00	6	M8
MRH-16	16	31.750	15.87	54.0	51.6	14.3	19.05	6.00	13.50	6	M8
MRH-20	20	33.528	17.47	60.3	58.2	17.5	19.05	5.00	16.50	6	M10
MRH-25	25	40.640	19.84	69.9	66.5	22.2	23.82	7.00	22.00	6	M12
MRH-32	32	40.640	19.84	69.9	66.5	22.2	23.82	7.00	22.00	6	M12
MRH-40	40	43.993	24.00	77.4	77.8	26.0	27.00	10.00	26.00	6	M12

PER APPLICAZIONI LEGGERE / Light duty

CODICE/*CODE*	D	E ± .01	G	L	W	R	H	J ± .01	K ± .01	Ø SPINA/*DOWEL*	VITE/*SCREW*
MRL-06	6	23.000	11.10	41.3	37.8	8.0	19.00	9.0	8.00	*3	M6
MRL-10	10	26.924	11.12	44.5	39.9	9.5	19.05	7.50	9.00	6	M8
MRL-13	13	29.972	14.27	50.8	48.3	12.7	19.05	6.50	12.00	6	M8
MRL-16	16	31.750	15.87	54.0	51.6	14.3	19.05	6.00	13.50	6	M8
MRL-20	20	33.528	17.47	60.3	58.2	17.5	19.05	5.00	16.50	6	M10
MRL-25	25	40.640	19.84	69.9	66.5	22.2	23.82	7.00	22.00	6	M12
MRL-32	32	40.640	19.84	69.9	66.5	22.2	23.82	7.00	22.00	6	M12
MRL-38	38	43.993	24.00	77.4	77.8	26.0	27.00	10.00	26.00	6	M12

Esempio di ordinazione/*Order example*: MRH-10 (codice/*code*)

Via Alba, 25 - 10024 Moncalieri (TO) - Italy
Tel. +39 011641121 - Fax +39 0116829188
cftorino@cftorino.it www.cftorino.it

CF TORINO