# Portapunzoni

*Retainers*

## Portapunzoni per punzoni testa cilindrica tondi con terzo foro spina simmetrico

*Retainers for shoulder round punches with symmetrical 3rd dowel*



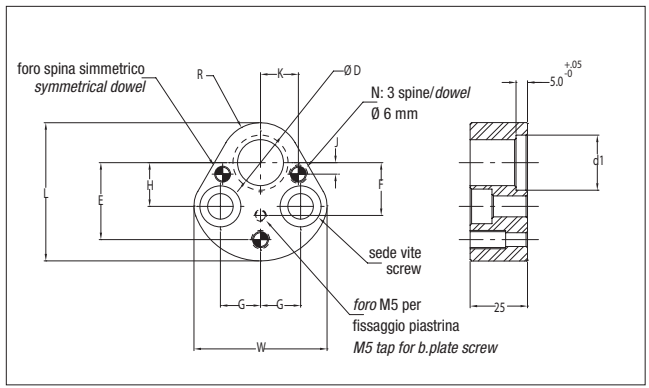


| Codice/*Code* |
|---|
| Cod. **MRP** |

| CODICE *CODE* | D | d1 | L | W | R | H | J ± .01 | K ± .01 | G | E ± .01 | F | VITE *SCREW* |
|---|---|---|---|---|---|---|---|---|---|---|---|---|
| MRP 10 | 10 | 14.0 | 44.5 | 39.9 | 9.5 | 19.05 | 7.50 | 9.00 | 11.12 | 26.924 | 16.00 | M8 |
| MRP 13 | 13 | 17.0 | 50.8 | 48.3 | 12.7 | 19.05 | 6.50 | 12.00 | 14.27 | 29.972 | 16.00 | M8 |
| MRP 16 | 16 | 20.0 | 54.0 | 51.6 | 14.3 | 19.05 | 6.00 | 13.50 | 15.87 | 31.750 | 16.00 | M8 |
| MRP 20 | 20 | 24.0 | 60.3 | 58.2 | 17.5 | 19.05 | 5.00 | 16.50 | 17.47 | 33.528 | 23.00 | M10 |
| MRP 25 | 25 | 29.0 | 69.9 | 66.5 | 22.2 | 23.82 | 7.00 | 22.00 | 19.84 | 40.640 | 30.00 | M12 |
| MRP 32 | 32 | 36.0 | 69.9 | 66.5 | 22.2 | 23.82 | 7.00 | 22.00 | 19.84 | 40.640 | 30.00 | M12 |
| MRP 40 | 40 | 44.0 | 77.40 | 77.8 | 26.0 | 27.00 | 10.00 | 26.00 | 24.00 | 43.993 | 33.35 | M12 |

Esempio di ordinazione/*Order example*: MRP 16 (codice/*code*)

Per accessori e piastrine di spessoramento vedi pagg. 3.49-3.50
*For accessories and backing plates see pages* 3.49-3.50

Via Alba, 25 - 10024 Moncalieri (TO) - Italy
Tel. +39 011641121 - Fax +39 0116829188
cftorino@cftorino.it www.cftorino.it