Portapunzoni per punzoni testa rinforzata tondi *Retainers for shoulder round punches head 8mm*

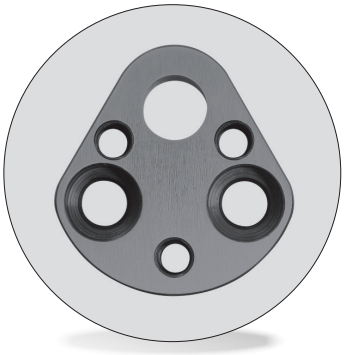

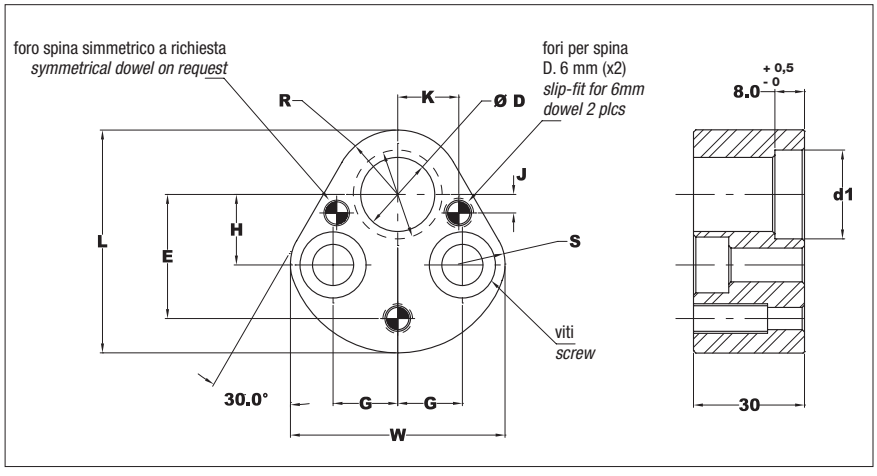

Codice/*Code*
Cod. **XMRN**

CODICE *CODE*	D	d1	L	W	R	H	J ± .01	K ± .01	S	G	E ± .01	MISURA VITI *SCREW SIZE*
XMRN-10	10.00	15.5	44.3	39.75	9.5	19.05	7.5	9.0	12.65	11.12	26.924	M8
XMRN-13	13.00	18.5	50.67	48.13	12.7	19.05	6.5	12.0	9.47	14.27	29.972	M8
XMRN-16	16.00	21.5	53.85	51.6	14.2	19.05	6.0	13.5	9.47	15.87	31.750	M8
XMRN-20	20.00	25.5	60.2	58.0	17.4	19.05	5.0	16.5	12.62	17.47	33.528	M10
XMRN-25	25.00	30.5	69.72	66.32	22.2	23.82	7.0	22.0	22.17	19.84	40.640	M12

Portapunzoni per punzoni testa rinforzata con sagoma

Retainers for shoulder shaped punches head 8mm

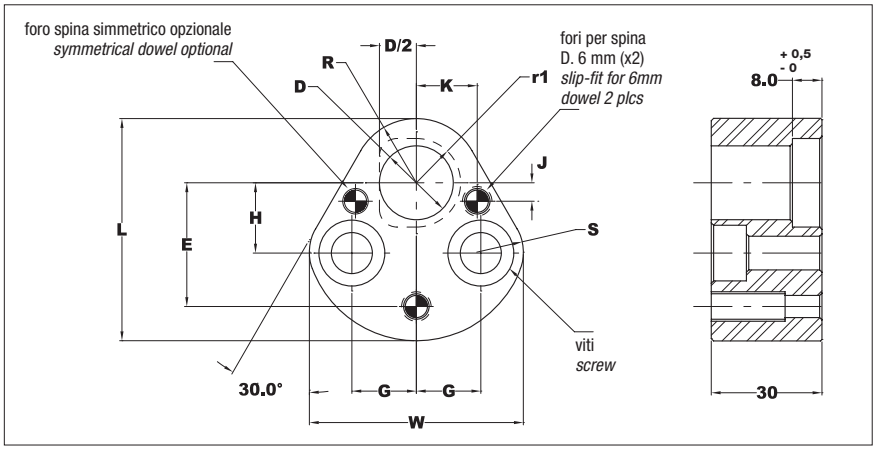

Codice/*Code*
Cod. **XMRO**

CODICE *CODE*	D	r1	L	W	R	H	J ± .01	K ± .01	S	G	E ± .01	MISURA VITI *SCREW SIZE*
XMRO-10	10.00	7.75	44.3	39.75	9.5	19.05	7.5	9.0	12.65	11.12	26.924	M8
XMRO-13	13.00	9.25	50.67	48.13	12.7	19.05	6.5	12.0	9.47	14.27	29.972	M8
XMRO-16	16.00	10.75	53.85	51.6	14.2	19.05	6.0	13.5	14.2	15.87	31.750	M8
XMRO-20	20.00	12.75	60.2	58.0	17.4	19.05	5.0	16.5	12.62	17.47	33.528	M10
XMRO-25	25.00	15.25	69.72	66.32	22.2	23.82	7.0	22.0	22.17	19.84	40.640	M12

Esempio di ordinazione/*Order example*: XMRO13 (codice/*code*)

Per accessori e piastrine di spessoramento vedi pagg. 3.49-3.50
For accessories and backing plates see pages 3.49-3.50

Via Alba, 25 - 10024 Moncalieri (TO) - Italy
Tel. +39 011641121 - Fax +39 0116829188
cftorino@cftorino.it www.cftorino.it